XPRESS EXECUTE XQ11 SET-UP SHEET

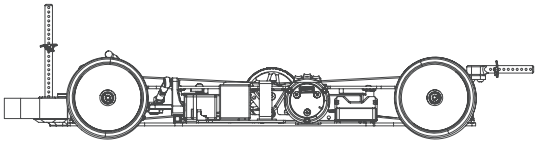

Driver	Yugo Nagashima	Track Surface	Indoor / Outdoor / Asphalt / Carpet			Track Temperture	
Date	FIRC	Track Traction	mid	Result	3rd	Air Temperture	
Track	GDC	Country	china	Best Lap		Humidity	
						Remark	

Front

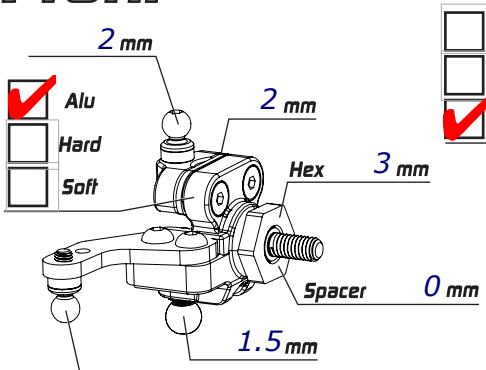

- [x] Alu
- [ ] Hard
- [ ] Soft

Carbon Plate
- [ ] Hard
- [ ] Soft
- [x] No

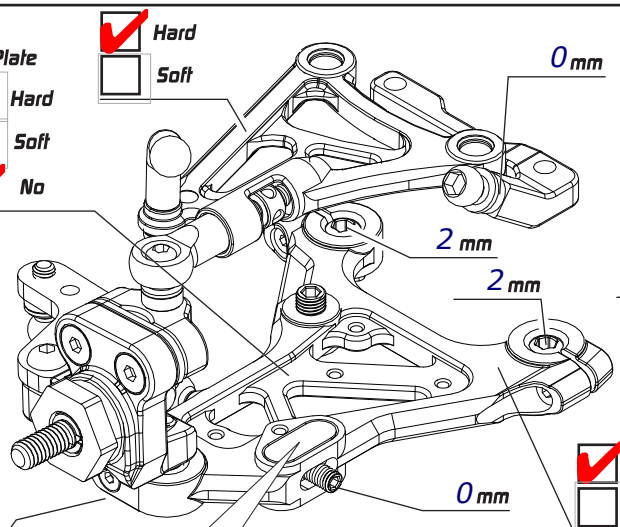

- [x] Hard
- [ ] Soft

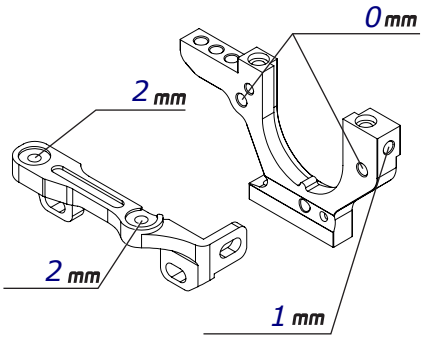

Ride Height	5.0 mm	Sway Bar	1.2 mm
Toe	out1	Camber	2
		Downstop	5.0 mm

- [x] Spool
- [x] High Diff
- [ ] Low Diff
- [ ] Gear Diff

Cst
Weight

Outer stock mm

Steering

◁ [x] 0 [ ] 1.0 [ ] 2.0 ▷

[x] 8.0 [ ] 8.5 [ ] 9.0

1 mm

Remark: in25° out18°

Shocks

Spring	xray2.4~2.7
Oil	axon 32.5
Rebound	
Piston	1.1×4
Length	

Note

Rear

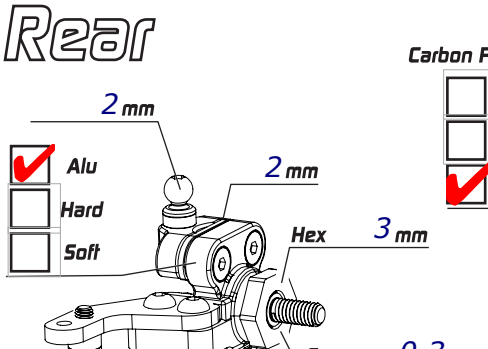

- [x] Alu
- [ ] Hard
- [ ] Soft

Carbon Plate
- [ ] Hard
- [ ] Soft
- [x] No

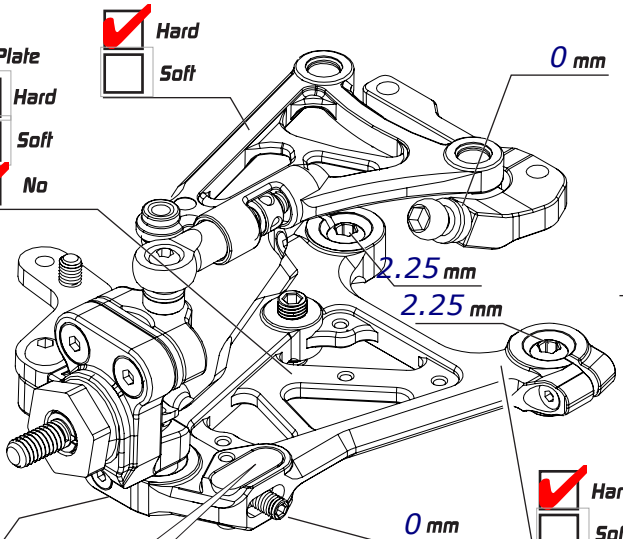

- [x] Hard
- [ ] Soft

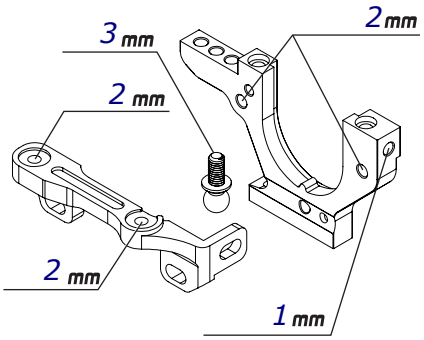

Ride Height	5.2 mm	Sway Bar	1.2 mm
Toe	2	Camber	2
		Downstop	4.2 mm

- [x] High Diff
- [ ] Low Diff

Gear Diff
Cst 7500
Weight 1.4

◁ [x] 0 [x] 1.0 [ ] 2.0 ▷

Remark

Shocks

Spring	xray2.5
Oil	axon32.5
Rebound	
Piston	1.1×4
Length	

Note

Weight g

Weight g

Battery	fido 4200mAh	Servo	s15 pgb
Body	twister sp ul	Tires	sweep
Wing	0.5	Additive	magictyep
ESC	zombie tz-01	Servo Horn Height	17.5 mm
Motor	zombie evo2 5.5T	Timing	34
Pinon	30T Spur 110T / 64 P	FDR	

Weight 5 g

- [ ] Carbon
- [x] Alu

Weight 5 g

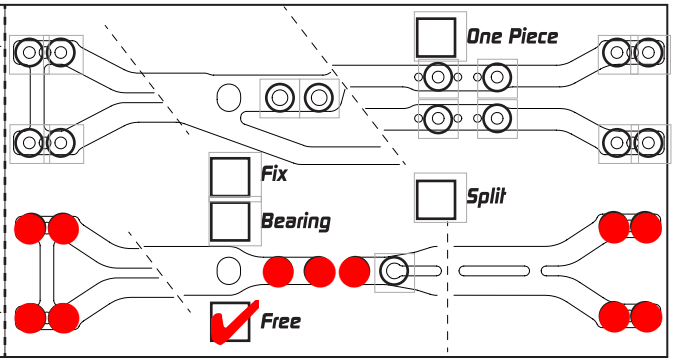

- [ ] One Piece
- [ ] Fix
- [ ] Bearing
- [ ] Split
- [x] Free