XPRESS EXECUTE XQ11R SET-UP SHEET

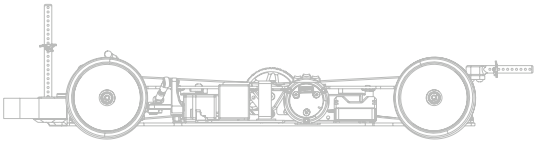

Driver: Yugo Nagashima
Track Surface: Indoor / Outdoor / Asphalt / Carpet ✔
Track Temperture:
Date: jmrca2025
Track Traction: Hi
Result:
Air Temperture:
Track: Tukuba rc park
Country:
Best Lap:
Humidity:
Remark:

Front

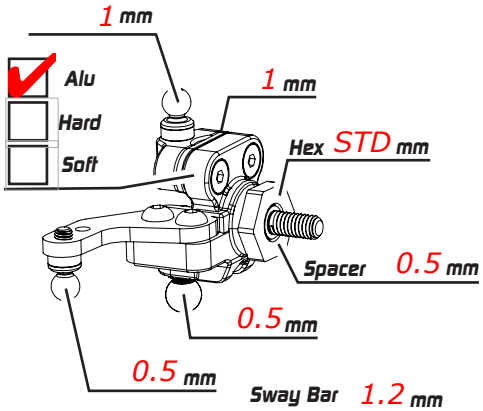

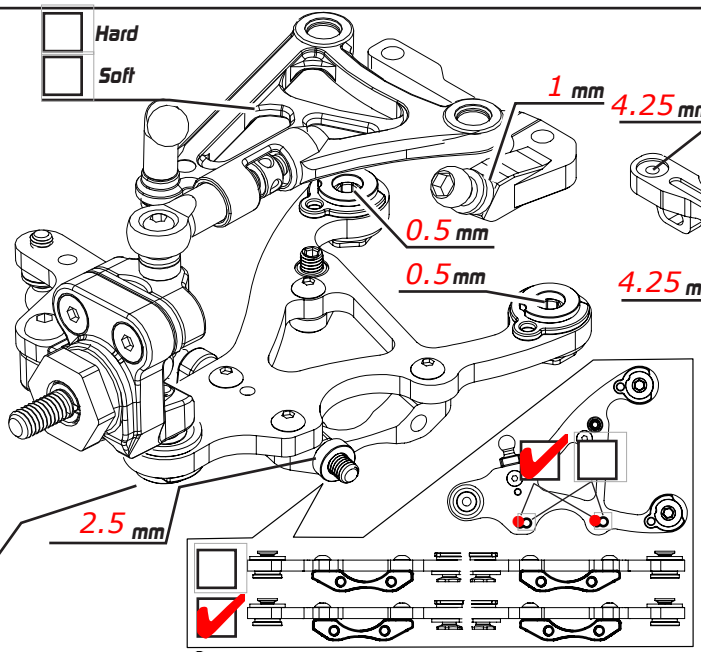

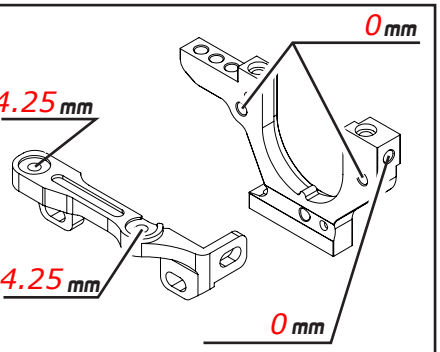

Sway Bar 1.2 mm
Ride Height 5 mm
Camber 1.5
Toe -1
Downstop 5.2 mm
✔ Spool
Gear Diff
✔ High Diff
Cst
Low Diff
Weight
Outer 4 mm
Steering 25°in
0 mm
✔ 8.0 ☐ 8.5 ☐ 9.0
Remark

Shocks

Spring 2.5~2.8
Oil 32.5
Rebound
Piston 4×1.2
Length 7.8
Note caster4°

Rear

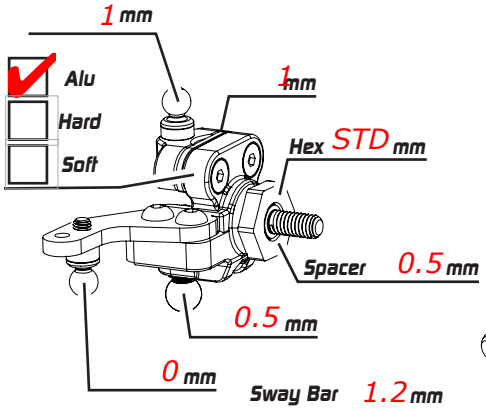

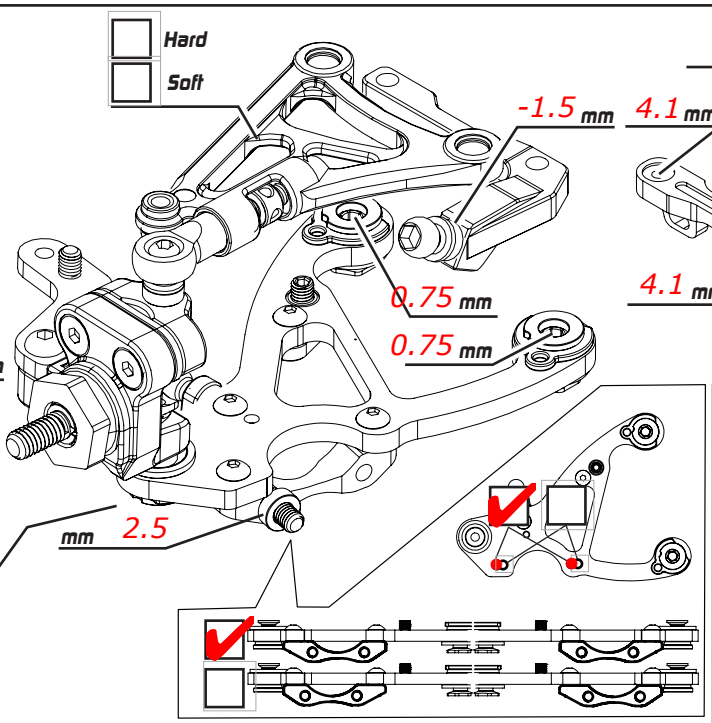

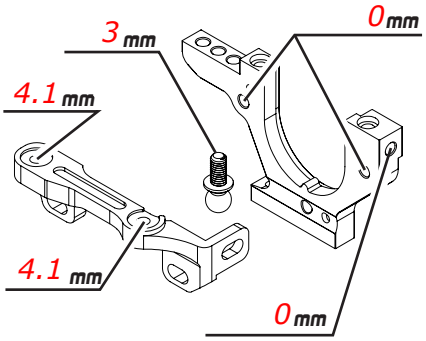

Sway Bar 1.2 mm
Ride Height 5.4 mm
Camber 1.5
Toe -2.5
Downstop 4.2 mm
Gear Diff
✔ High Diff
Cst 12500
Low Diff
Weight 1.4
Remark

Shocks

Spring 2.7
Oil 32.5
Rebound
Piston 4×1.2
Length 7.8
Note caster-1.5°

Weight g

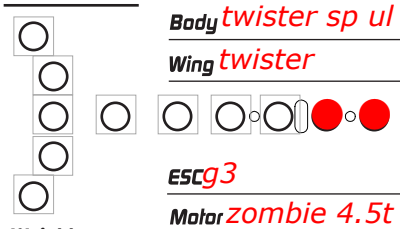

Battery Fido 4000
Servo gts2
Body twister sp ul
Tires
Wing twister
Additive
Servo Horn Height mm
ESC g3
Motor zombie 4.5t evo2
Timing 30
Pinon 28 T Spur 108 T / P
FDR 7.3

Weight g
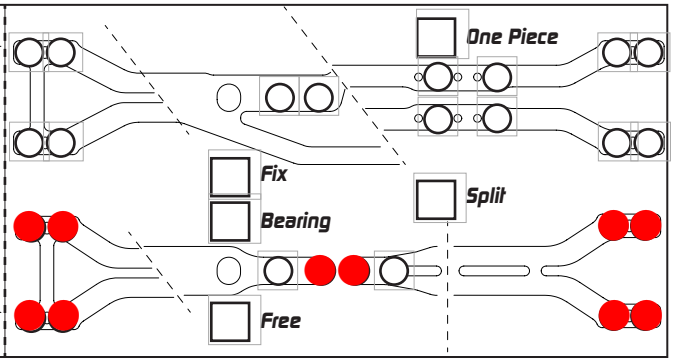
Weight 5 g
☐ Carbon
✔ Alu
Weight 5 g