XPRESS EXECUTE XQII SET-UP SHEET

Driver	Felix Law	Track Surface	Indoor	Carpet		Track Temperature	
Date	11/26/23	Track Traction	Medium	Result	1st	Air Temperature	
Track	Beachline raceway	Country	USA	Best Lap	12.8	Humidity	Remark

Front

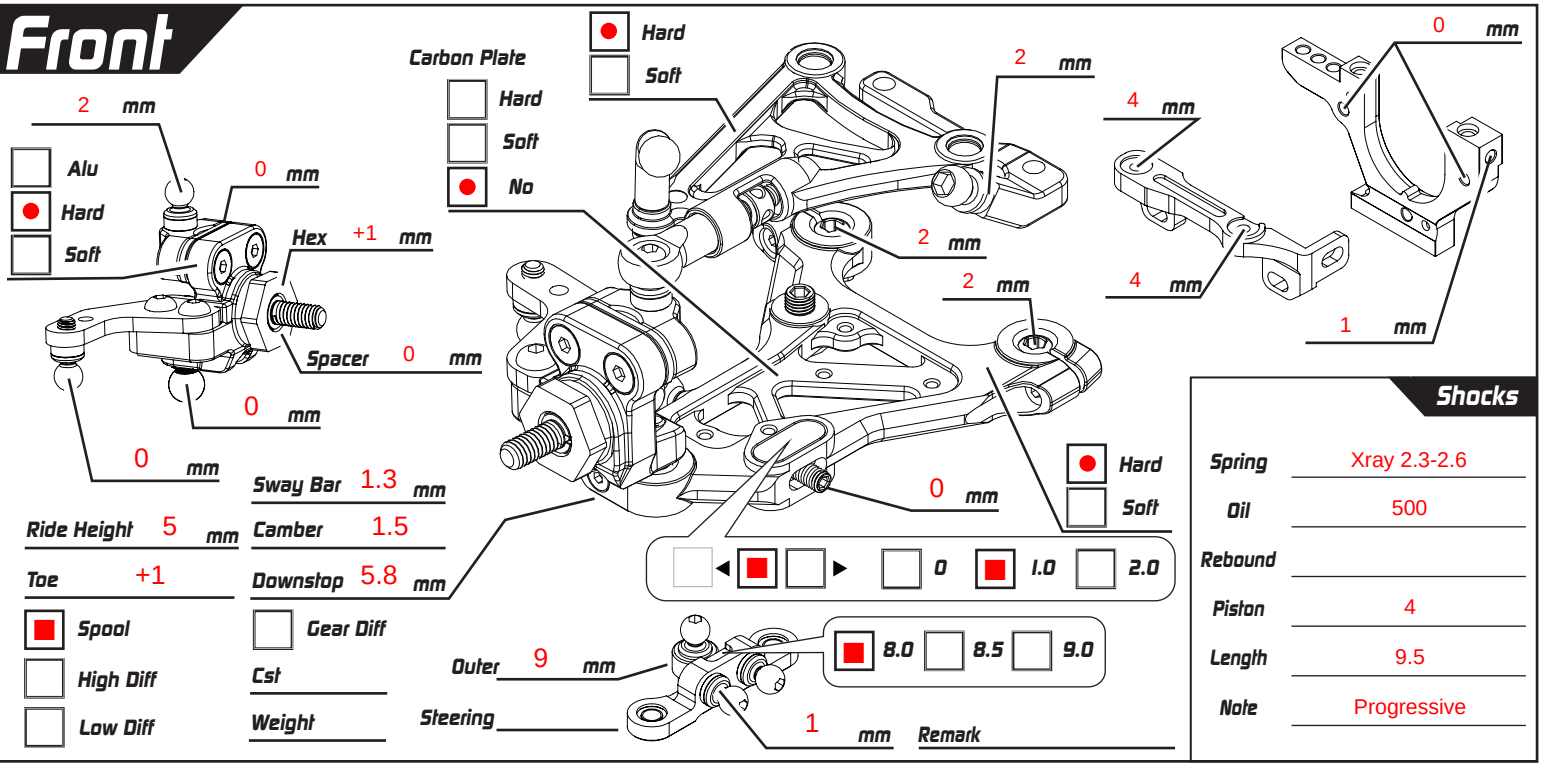

Ride Height	5 mm	Sway Bar	1.3 mm
Toe	+1	Camber	1.5
		Downstop	5.8 mm
Spool		Gear Diff	
High Diff		Cst	
Low Diff		Weight	
Outer	9 mm	Steering	
Remark			

Shocks

Spring	Xray 2.3-2.6
Oil	500
Rebound	
Piston	4
Length	9.5
Note	Progressive

Rear

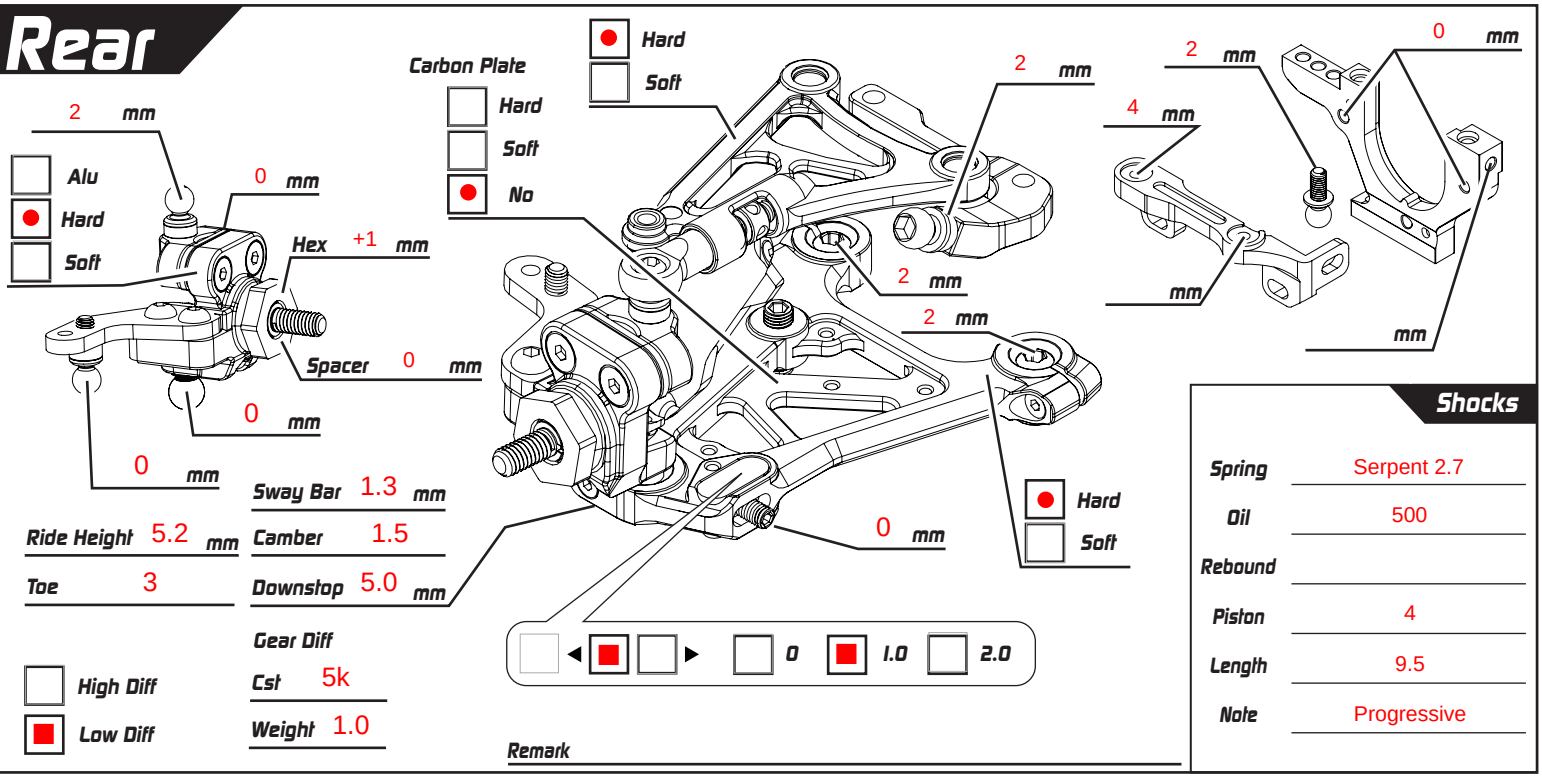

Ride Height	5.2 mm	Sway Bar	1.3 mm
Toe	3	Camber	1.5
		Downstop	5.0 mm
		Gear Diff	
High Diff		Cst	5k
Low Diff		Weight	1.0
Remark			

Shocks

Spring	Serpent 2.7
Oil	500
Rebound	
Piston	4
Length	9.5
Note	Progressive

Weight g

Battery 4800 Shorty

Body JC

Tires Hudy 28

Additive SXT

ESC M32T

Motor 5.5

Servo Horn Height 17 mm

Spur 64 P/ 112 T

Servo Sanwa LH 2

Pinon 64 P/ 29 T

FDR 7.337

Weight g

Weight g

Carbon

Alu
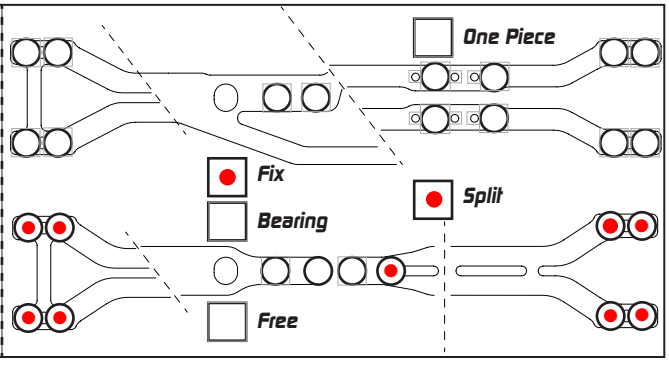
Weight g